特别说明

此资料来自百度文库（http://wenku.baidu.com/）

您目前所看到的文档是使用的**抱米花百度文库下载器**所生成

此文档原地址来自

http://wenku.baidu.com/view/a1b1f4df5022aaea998f0f01.html

感谢您的支持

抱米花

http://blog.sina.com.cn/lotusbaob

VISIT…

LANZAROTE

Caliente.COM

UGM 2001

Phase Change in Heat Exchangers

Brian Bell, Fluent Inc.

Motivation

- Demonstrate the use of Fluent to model phase change in heat exchangers
  - Processes of interest
    - Condensation
    - Evaporation
    - Boiling
- Illustrate how to model one such process through use of a detailed example
  - Shell-and-tube condenser
- Provide motivation for users to begin developing models of their own devices

 Copyright 2001 Fluent Inc. All rights reserved.

Outline

- Problem Description
  - Shell-and-tube condenser
    - Pure vapor condensation
    - Non-condensable gases
- Modeling Approach
  - Porous medium
  - Heat and mass transfer modeling
- Model Implementation
  - User-Defined Functions and User-Defined Memory
- Results
  - Steam condenser with non-condensable gases
  - Commercial chiller condenser

 Copyright 2001 Fluent Inc. All rights reserved.

Description of Problem

- Shell-and-tube condenser

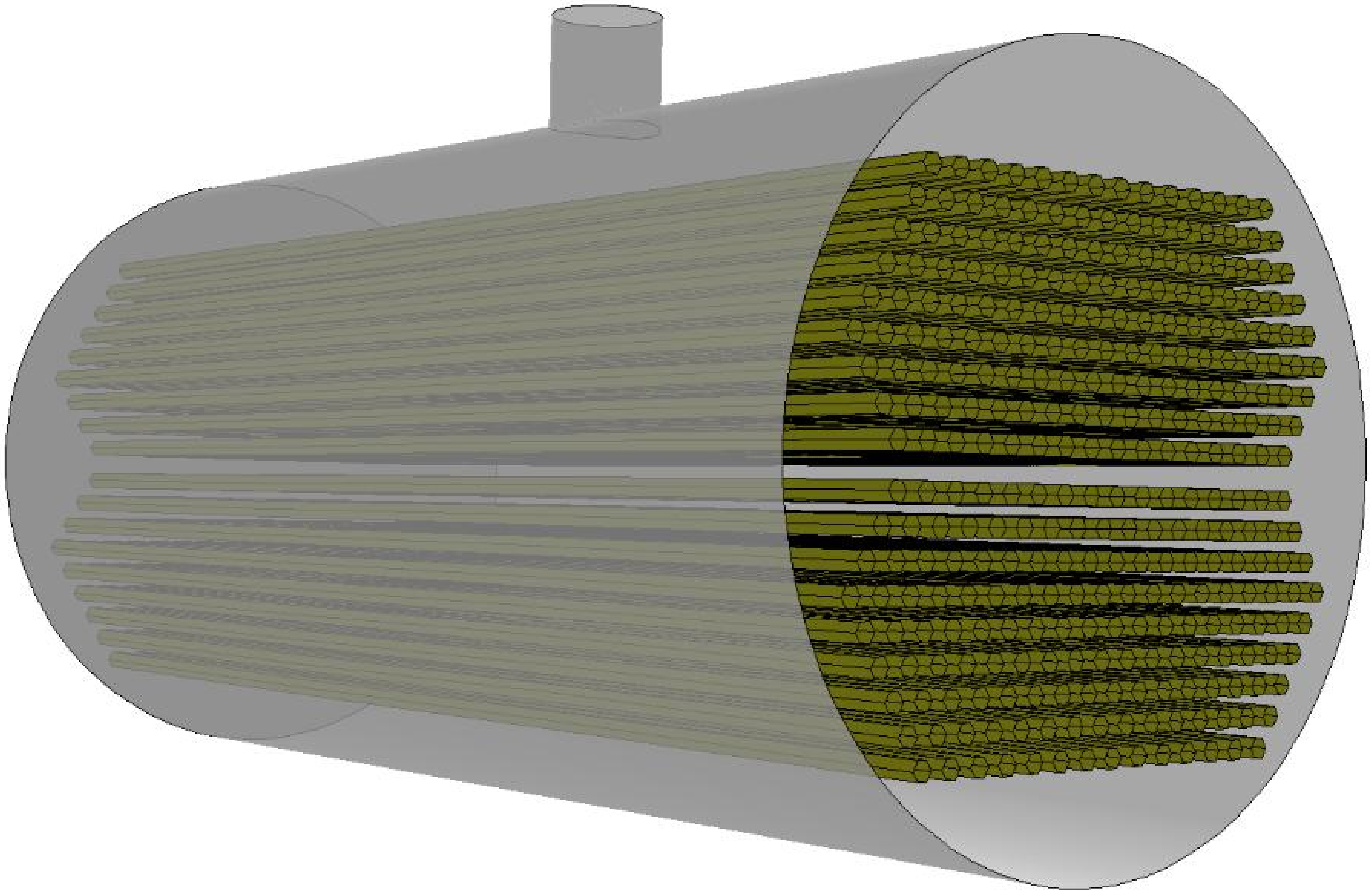

 Copyright 2001 Fluent Inc. All rights reserved.

Goals of CFD Modeling

- Condenser performance characterized by heat and mass transfer rate
- CFD allows evaluation of factors affecting heat and mass transfer in condenser
  - Tube bundle configuration
    - Tube arrangement
    - Number of passes
    - Location of inlet ports
    - Baffles
  - Pressure drop
  - Velocity field
  - Non-condensables
    - Location and configuration of purge system

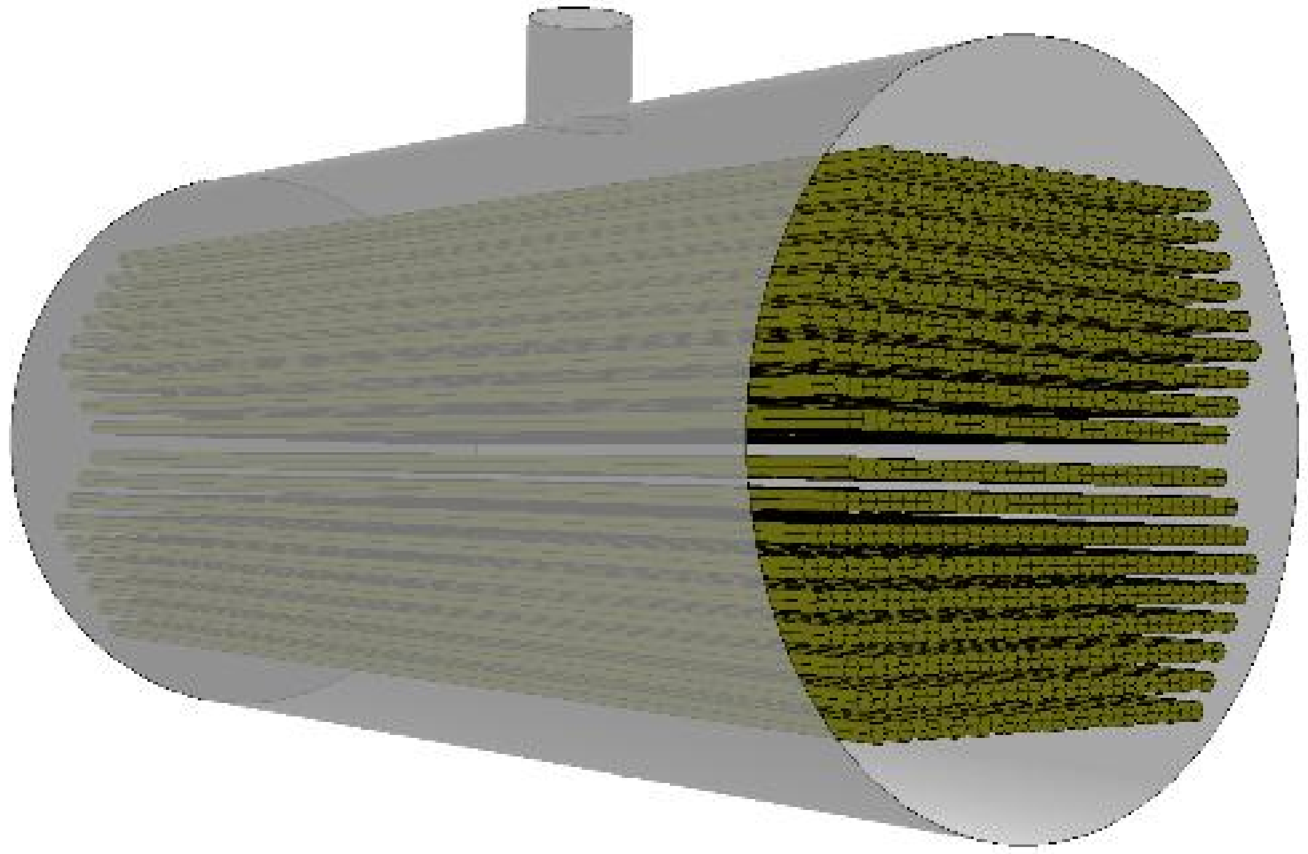

- Results allow identification of potential design improvements

 Copyright 2001 Fluent Inc. All rights reserved.

Film Condensation Process

- Driving potential for condensation is the temperature difference between vapor and cooling water
- Driving potential variation caused by
  - Pressure drop
  - Rise of cooling water temperature
  - Non-condensables

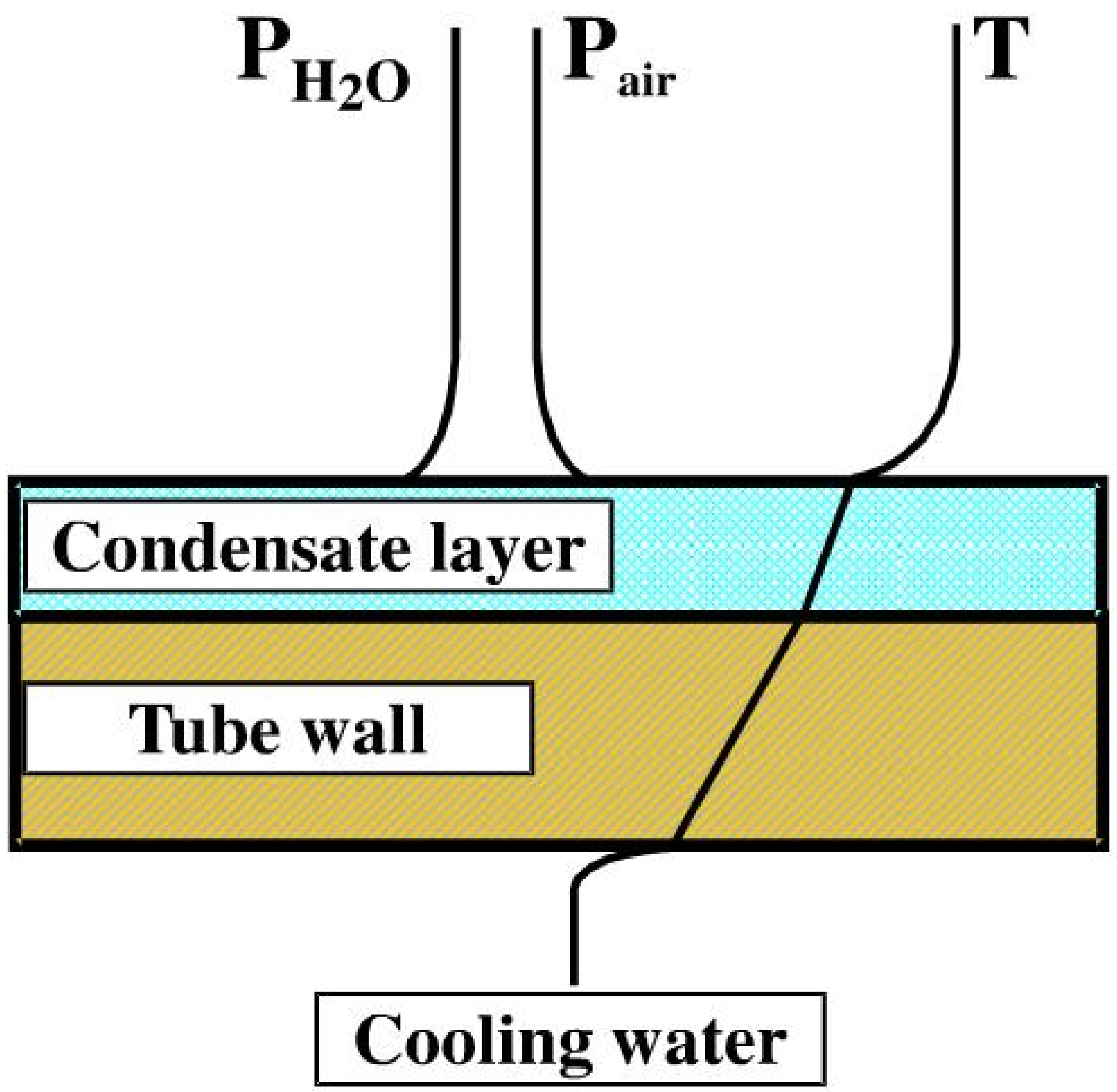

 Company Confidential Copyright 2001 Fluent Inc. All rights reserved.

CFD Modeling Theory

- Porous medium approach
  - Tube bundle treated as porous medium
  - Enables computationally efficient modeling of entire condenser
  - Comparison with detailed modeling approach
    - In 2-D, O(100)-O(1000) control volumes per tube versus more than one tube per control volume
- Heat and mass transfer models
  - Condensation rate calculation
    - Condensation rate determined from local flow field and cooling water temperature
    - Liquid film flow rate tracked in bundle from top to bottom
    - Cooling water temperature tracked from inlet to outlet

 Company Confidential Copyright 2001 Fluent Inc. All rights reserved.

Porous Medium Approach

- Representation of tube bundle as porous medium
  - Porosity is only required parameter
  - Porosity defined as ratio of fluid volume to total volume
    - Example: staggered tube bundle with equilateral triangular layout

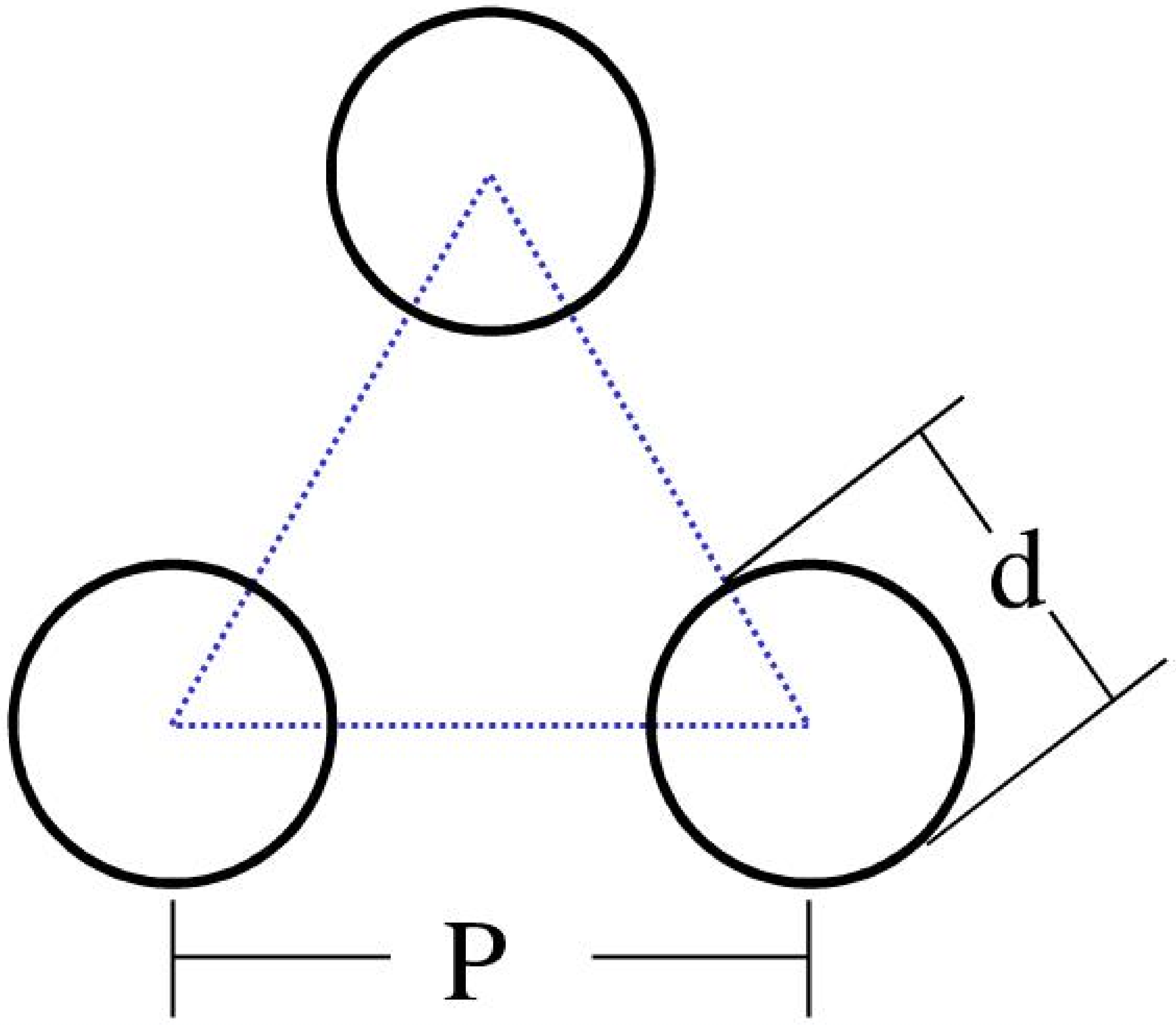

Porosity, β, expressed as:

$$\beta = 1 - \frac{\pi}{2\sqrt{3}}\left(\frac{d}{P}\right)^2$$

 Copyright 2001 Fluent Inc. All rights reserved.

Transport Equations

- Generic transport equation for porous medium approach

$$\underbrace{\oint_A \rho\phi\beta\mathbf{V}\cdot d\mathbf{A}}_{\text{convection}} = \underbrace{\oint_A \Gamma\nabla\beta\phi\cdot d\mathbf{A}}_{\text{diffusion}} + \underbrace{\int_V R_\phi dV}_{\text{distributed resistance}}$$

Eqn.	ϕ
continuity	1
x-mom.	u
y-mom.	v
species	ω

- Distributed resistance takes form of source terms that model details of the flow that are not resolved by the grid
- Porosity in convection and diffusion terms not modeled in Fluent
  - Distributed resistance terms most significant in tube bundle region

 Copyright 2001 Fluent Inc. All rights reserved.

Evaluation of Modeling Approach

- Advantages
  - Computationally efficient
    - Does an alternate, tractable approach exist?
  - Approach demonstrated to give meaningful data by several authors

- Disadvantages
  - Loss of some flow details due to averaging
  - Can be overcome by detailed modeling of small regions of condenser

Copyright 2001 Fluent Inc. All rights reserved.

Heat Transfer Process

- Film condensation on horizontal tube

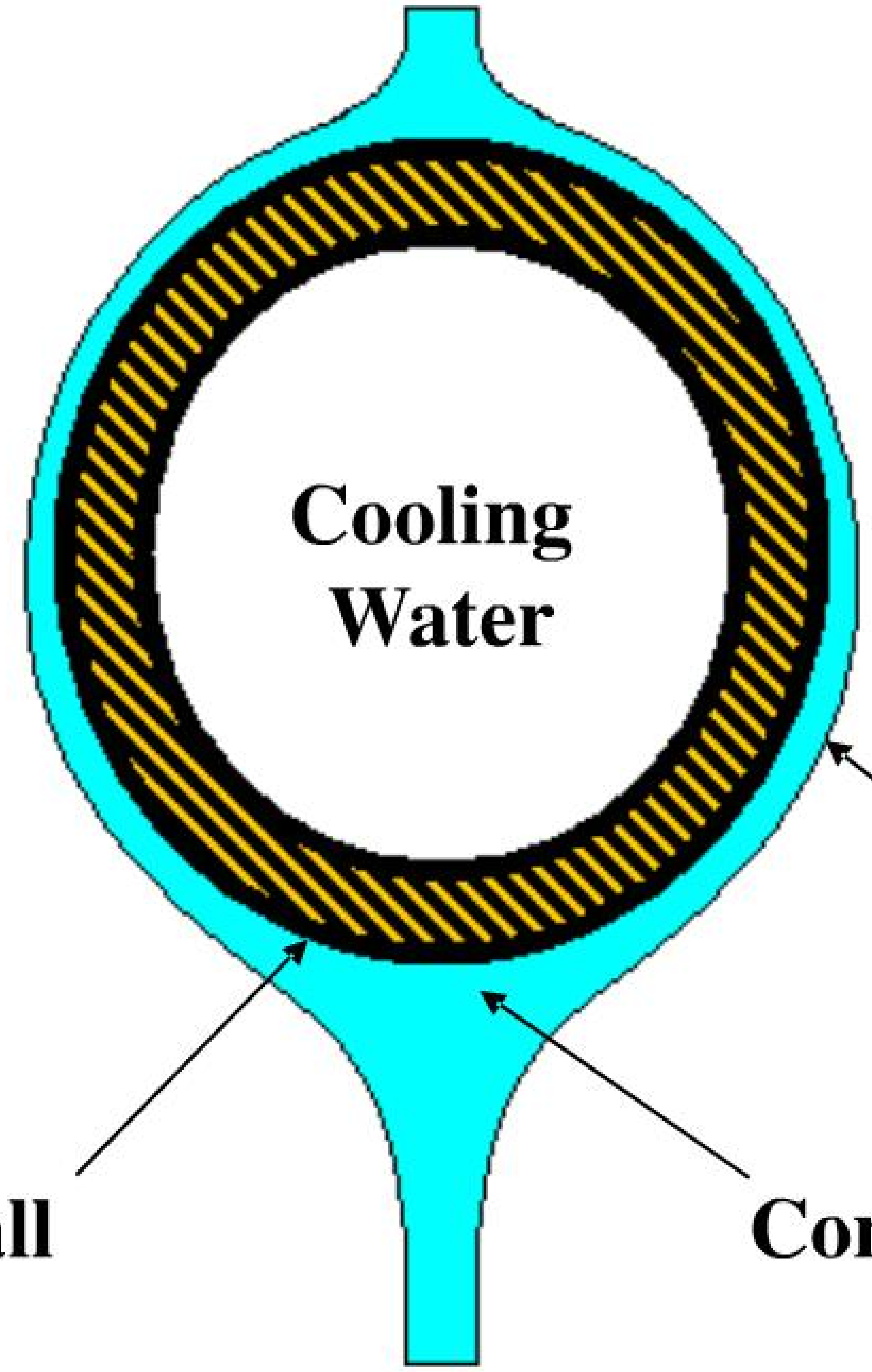

- Latent heat released at liquid-vapor interface transferred to cooling water

 Copyright 2001 Fluent Inc. All rights reserved.

Heat Transfer Model

- Heat transfer is modeled by coupling of thermal resistance network with CFD code

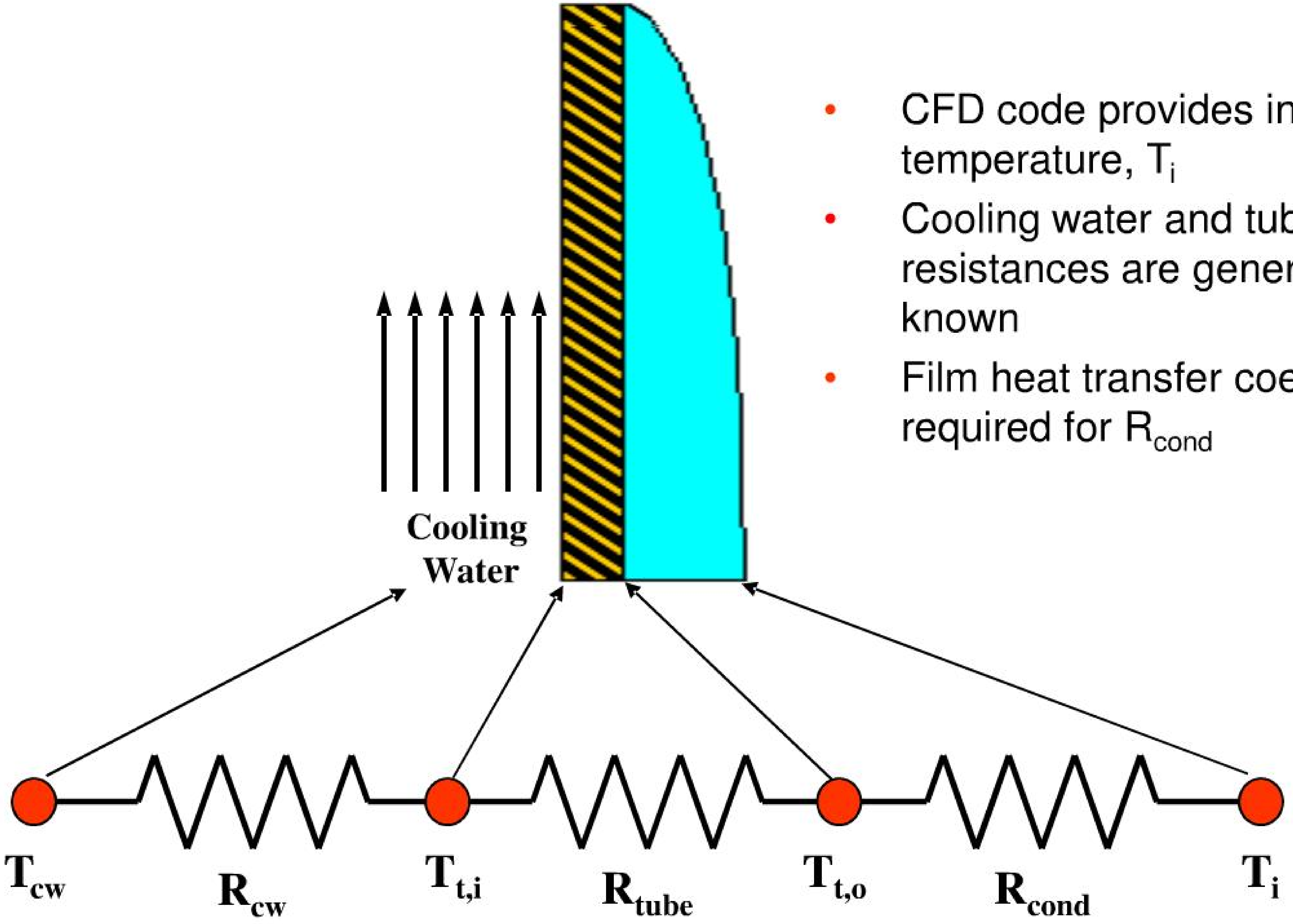

- CFD code provides interface temperature, T_i
- Cooling water and tube thermal resistances are generally well-known
- Film heat transfer coefficient is required for R_{cond}

 Copyright 2001 Fluent Inc. All rights reserved.

Film Heat Transfer Coefficient

- Critical component of heat transfer model
- Obtain from experiment

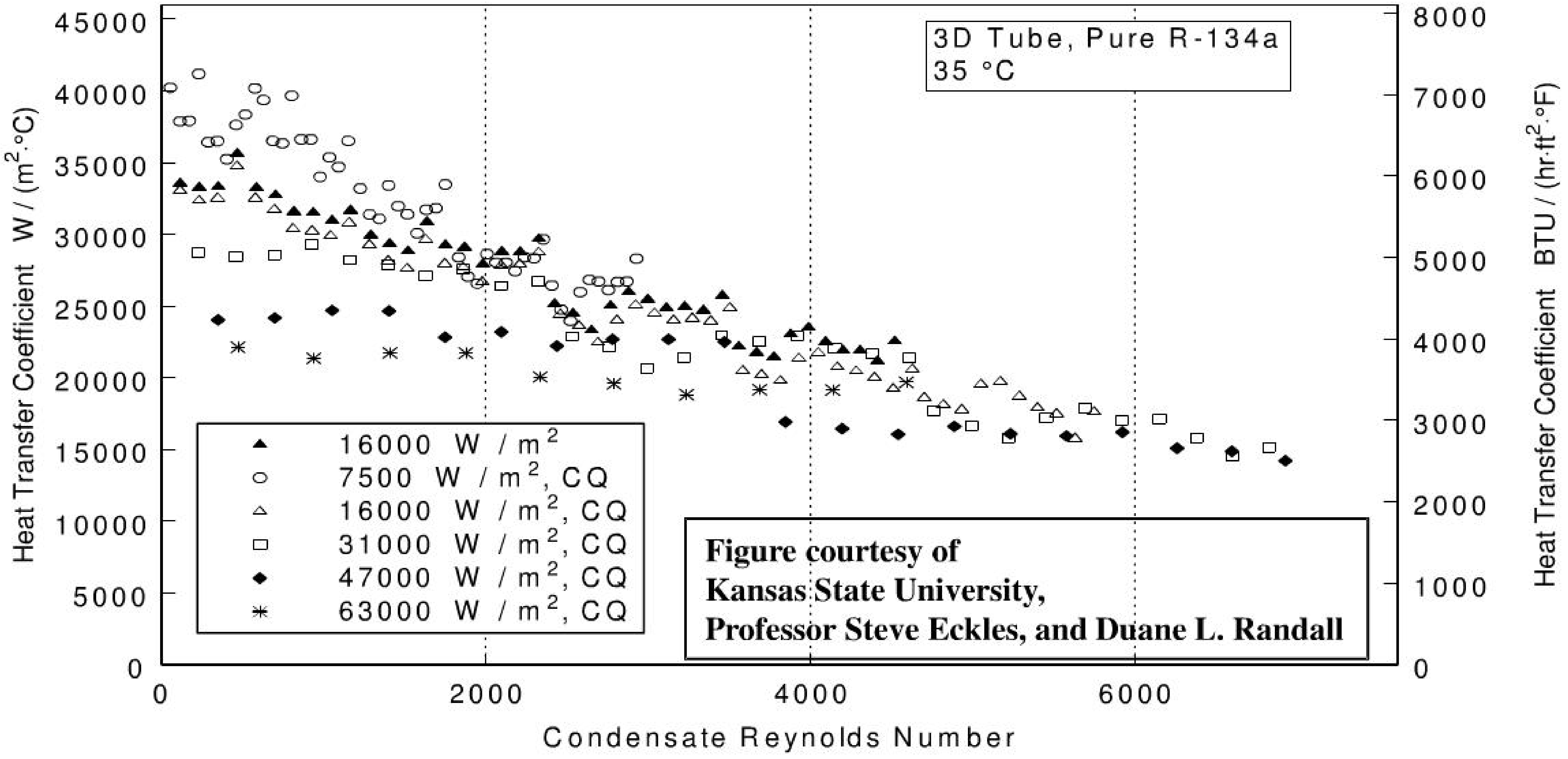

- Or obtain from literature
  - Steam condensation on smooth tubes

Copyright 2001 Fluent Inc. All rights reserved.

Modeling Assumptions

- Effect of liquid on flow field is neglected
  - Approach can also be implemented in Eulerian-Eulerian multiphase framework
    - Satisfactory model for liquid phase representation not currently available
    - Published results of this type of model do not appear to show significant advantage

- Vapor is assumed to be saturated
  - No superheating
  - Vapor temperature determined from pressure field calculated by CFD code

 Copyright 2001 Fluent Inc. All rights reserved.

Implementation of Model with UDFs

- UDFs are required for:
  - Source terms required by porous medium approach
    - Condensation rate
    - Pressure drop in porous region
  - Representation of tube bundle
    - Porosity
    - Condensate film flow rate accounting
    - Cooling water temperature calculation with multiple tube passes

 Company Confidential Copyright 2001 Fluent Inc. All rights reserved.

Tube Bundle Representation

- Bundle consists of N passes and M segments
  - Each segment defined as unique cell zone

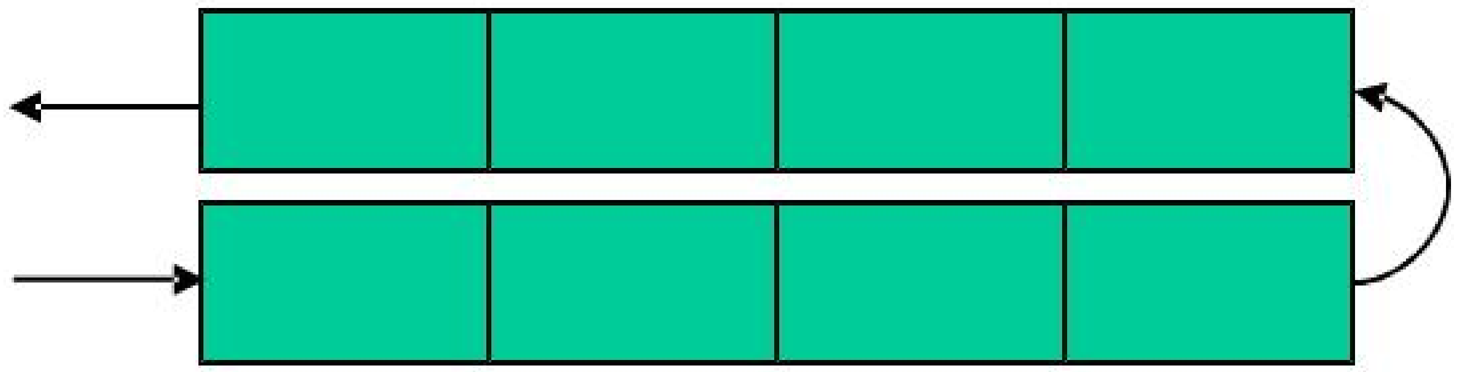

Example:
2 Pass bundle
N = 2, M = 4

  - Cooling water temperature calculation for each segment
    - Every iteration, condensation rate is summed over each segment
    - Inlet cooling water temperature = outlet temperature from previous segment
    - Segment outlet cooling water temperature calculated by energy balance.

$$Q = \dot{m}_{cw} c_p \left(T_{out} - T_{in} \right)$$

    - Log-mean temperature for each segment calculated based on vapor temperature and cooling water inlet and outlet temperatures

$$\Delta T_{lm} = \frac{\left(T_v - T_{cw,o}\right) - \left(T_v - T_{cw,i}\right)}{\ln\left[\frac{\left(T_v - T_{cw,o}\right)}{\left(T_v - T_{cw,i}\right)}\right]} = T_v - T_m$$

Copyright 2001 Fluent Inc. All rights reserved.

Tube Bundle Grid Structure

- Structured, cartesian grid used in tube bundle
  - Each control volume has unique i,j,k index

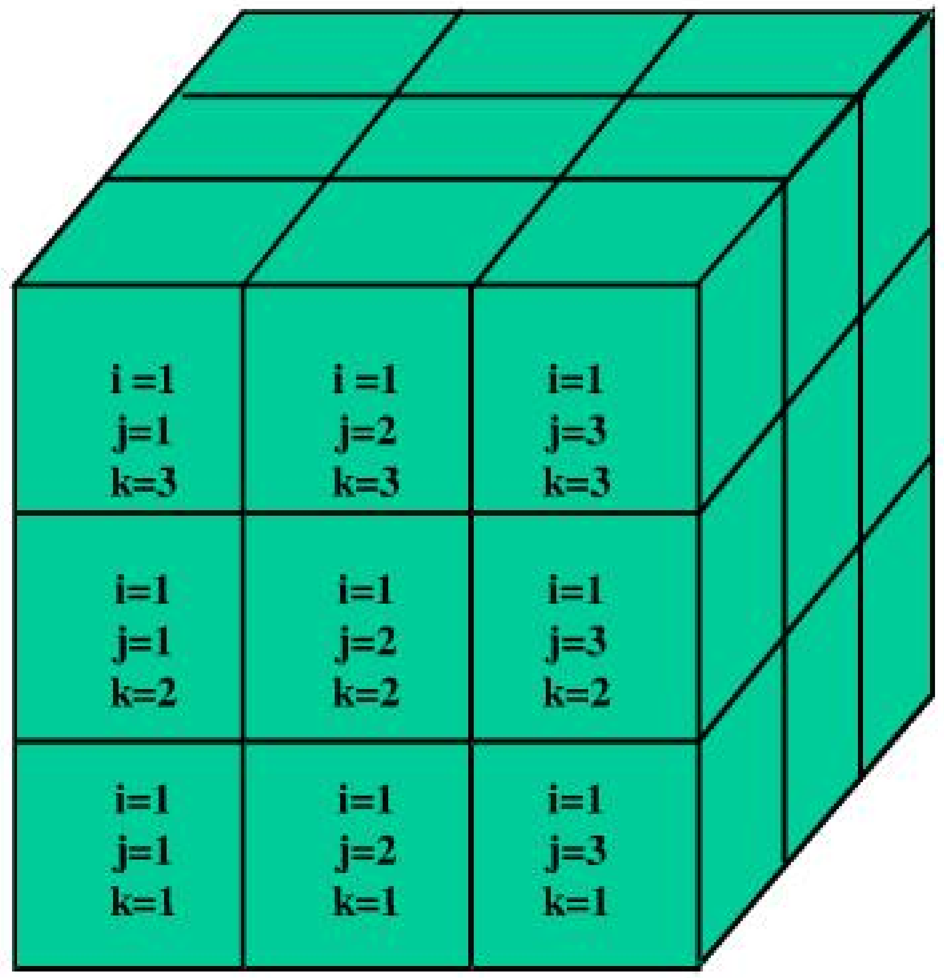

  - Grid structure created with UDFs
    - Grid generator, solver do NOT utilize structure
  - Used to track condensate film flow rate

$$\dot{m}_{film}\Big|_{i=1,j=1,k=1} = \dot{m}_{film}\Big|_{i=1,j=1,k=2} + \dot{m}_{film}\Big|_{i=1,j=1,k=3} + \dot{m}_{cond}\Big|_{i=1,j=1,k=1}$$

 Copyright 2001 Fluent Inc. All rights reserved.

Source Terms

- Algorithm for source term in continuity equation
  - Obtain pressure, velocity and species mass fraction (if necessary) from current solution values
  - Obtain film Reynolds number and cooling water temperature from User-Defined Memory
  - Calculate heat flux based on current value of solution variables
  - Translate heat flux into volumetric mass source term
  - Under-relax source term
    - $S_{i+1} = S_i + \alpha\,(S_o - S_i)$
    - Required for solution stability. Alpha typically 0.01 – 0.10
    - Value of source term from previous iteration, S_o, stored in User-Defined Memory
- Source term in momentum equations
  - Calculated using empirical correlations with tube bundle porosity and current velocity

 Copyright 2001 Fluent Inc. All rights reserved.

Define_On_Demand Functions

- Define_On_Demand functions executed once per iteration
  - Update condensate film mass flow rate
  - Update cooling water temperature
    - Assume uniform temperature for each bundle segment
  - New values stored in User-defined memory
- Automatic Define_On_Demand execution possible
  - Example:

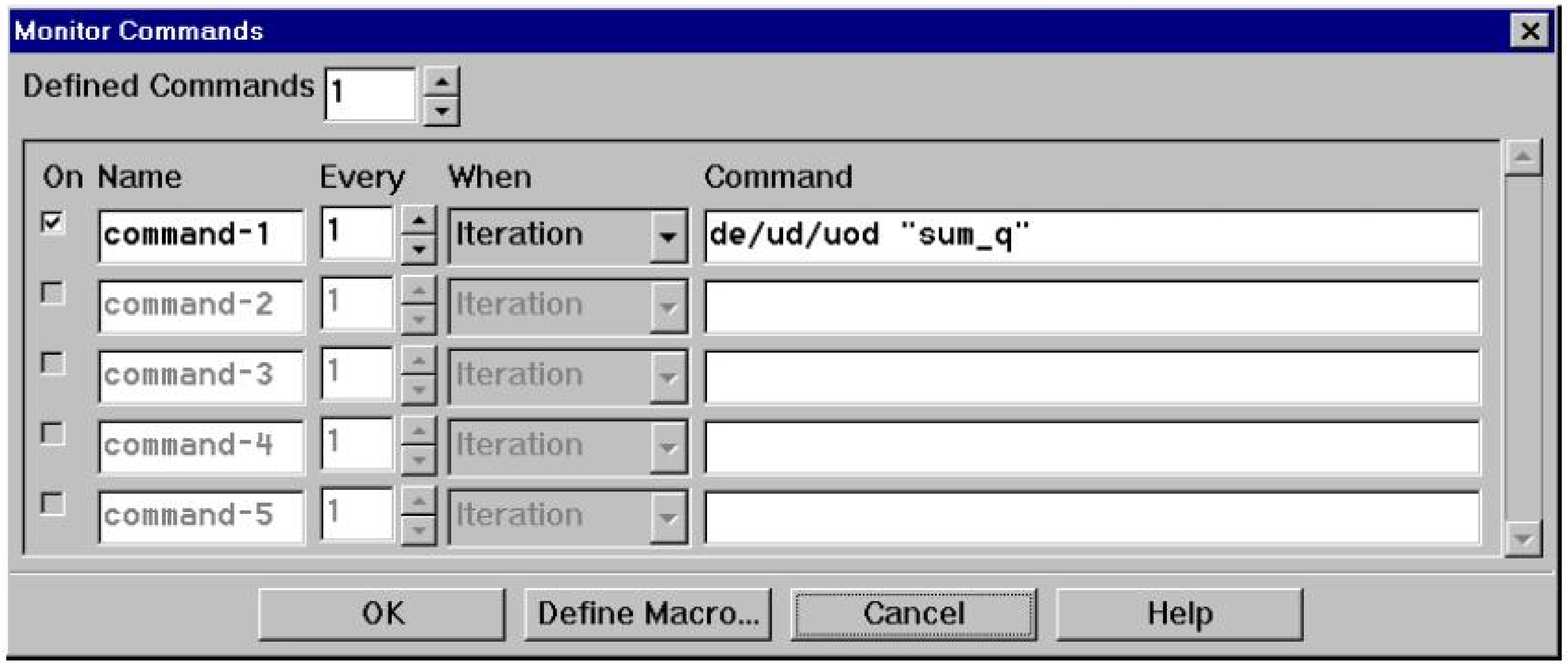

 Copyright 2001 Fluent Inc. All rights reserved.

Solution Algorithm

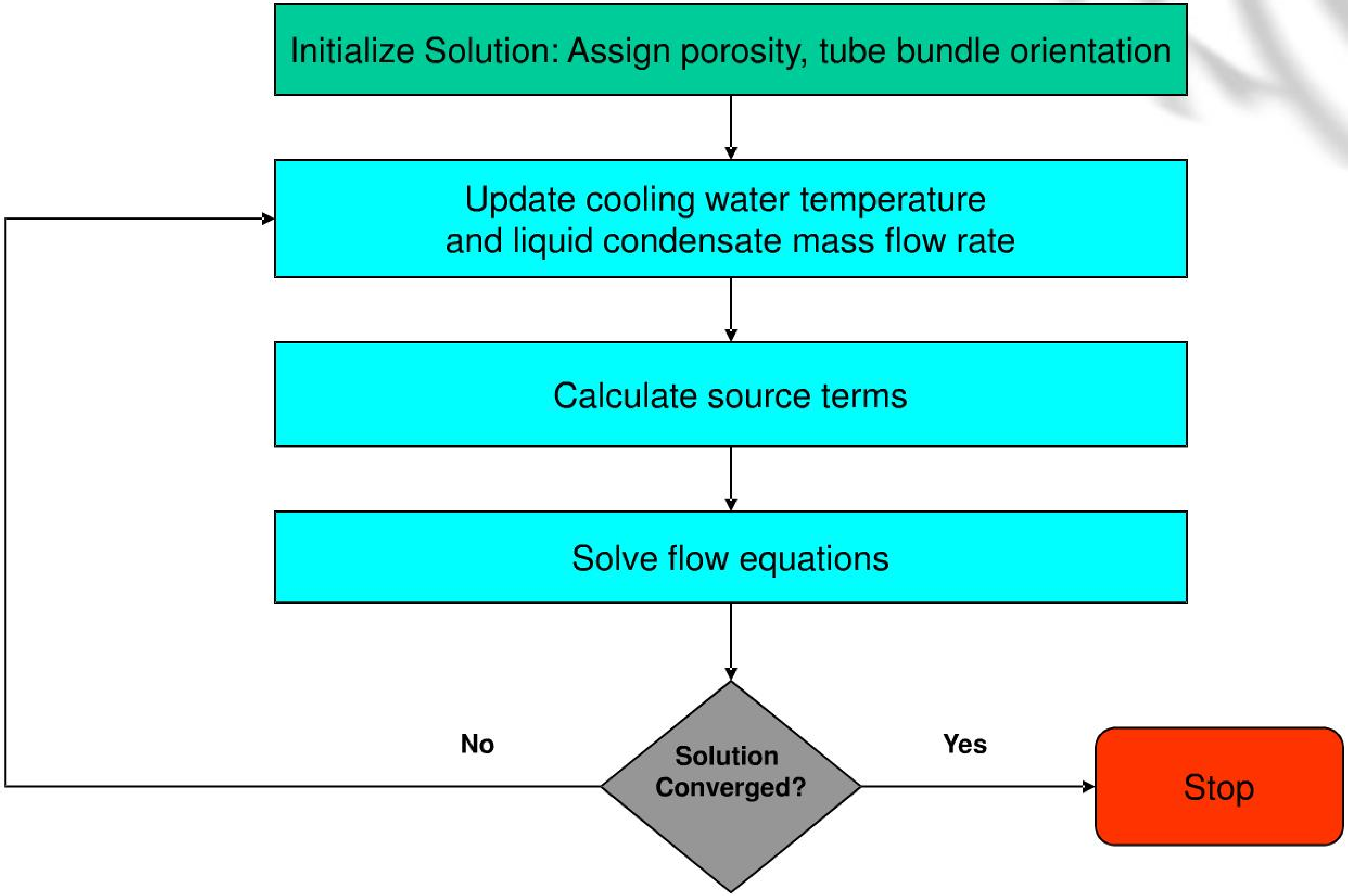

Copyright 2001 Fluent Inc. All rights reserved.

Examples

- Steam condensation with non-condensable gases

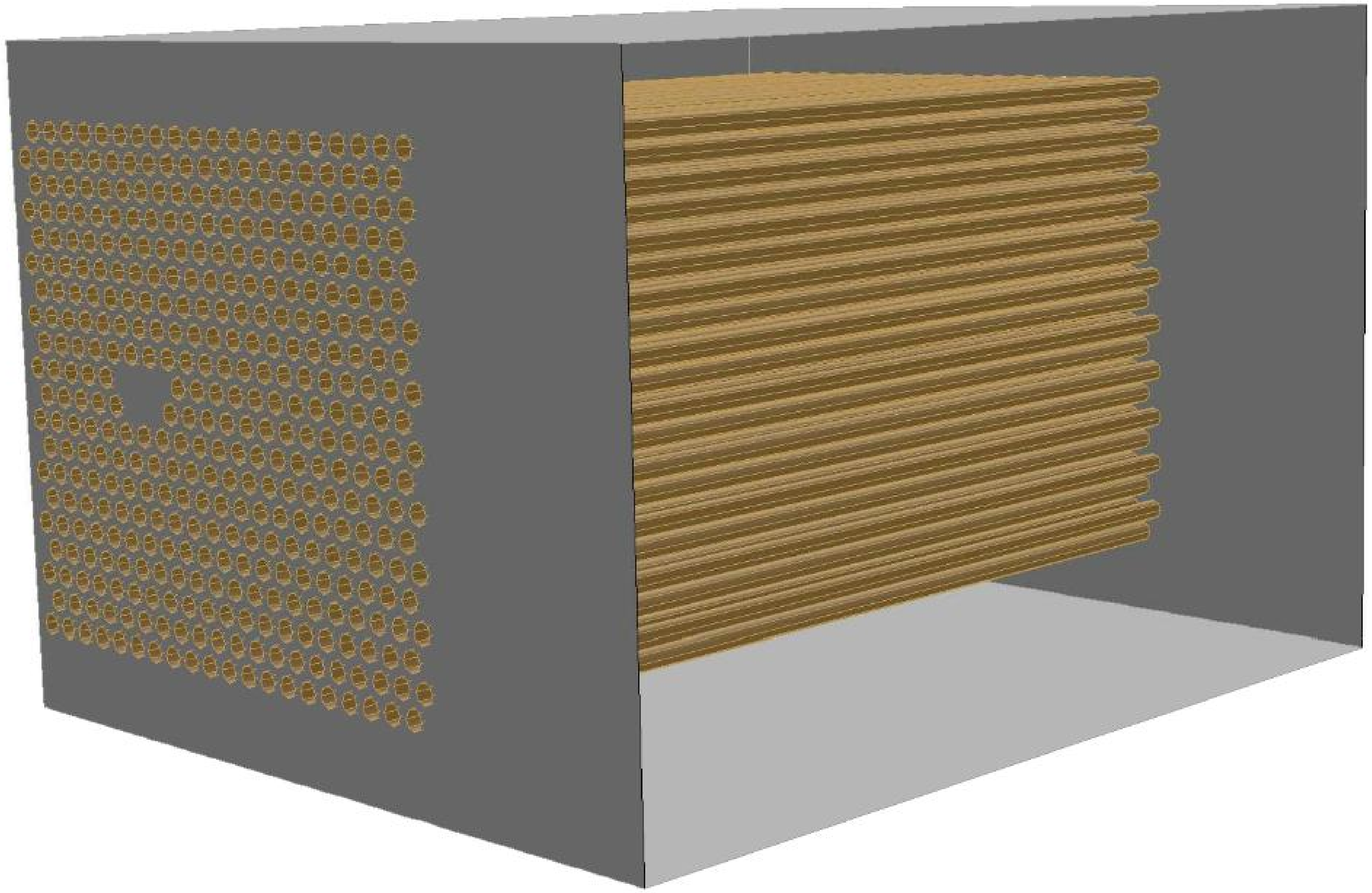

McAllister Condenser
from: Bush et al., 1990, *Proc. Int. Symp. On Condensers and Condensation*

 Copyright 2001 Fluent Inc. All rights reserved.

McAllister Condenser Geometry

- Boundary conditions and model inputs
  - Shell Dimensions 1.02 m X 1.22 m X 0.78 m

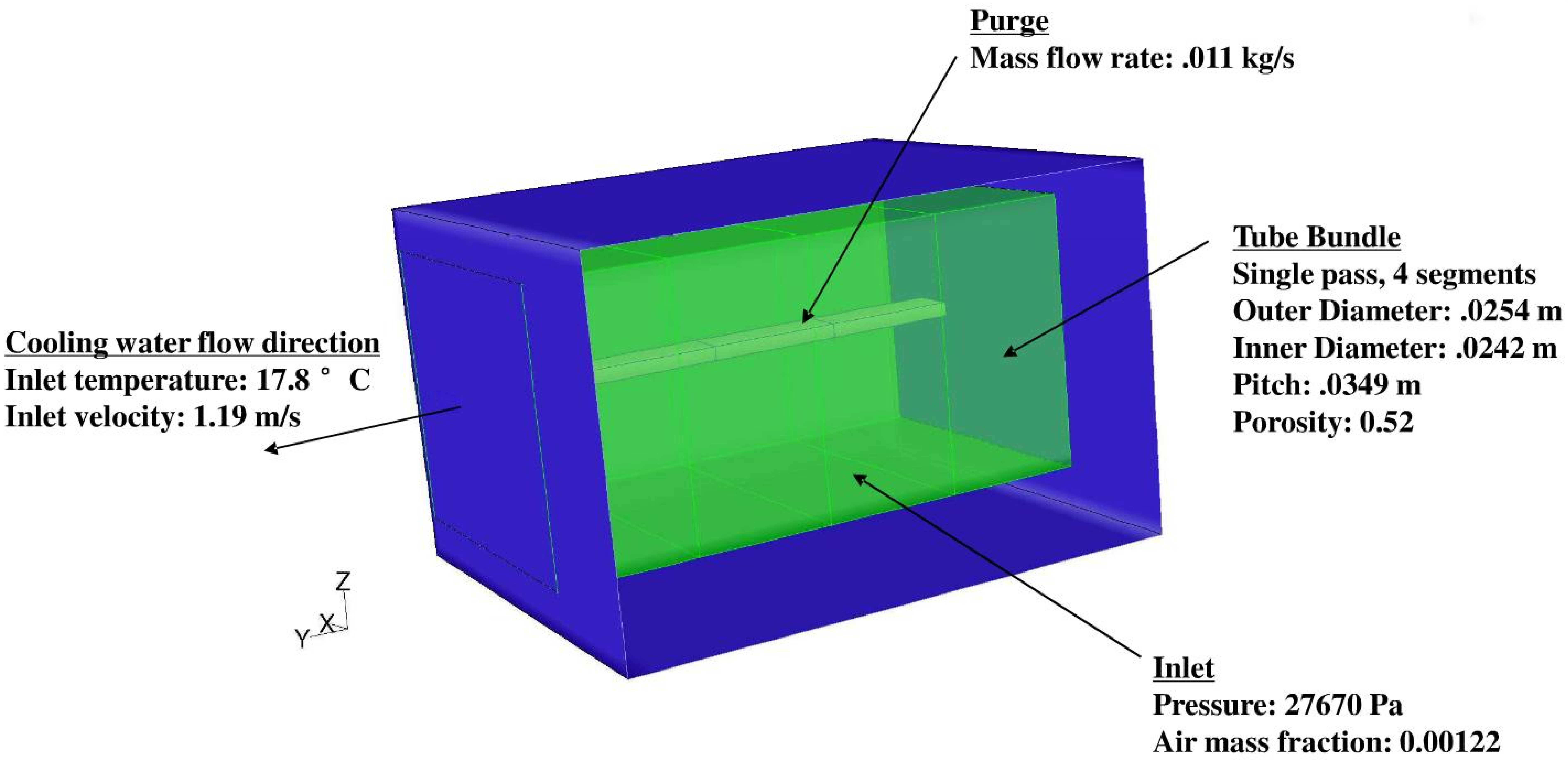

Copyright 2001 Fluent Inc. All rights reserved.

Condenser Grid

- 15,000 Control Volumes
- Simple geometry allows structured grid throughout domain

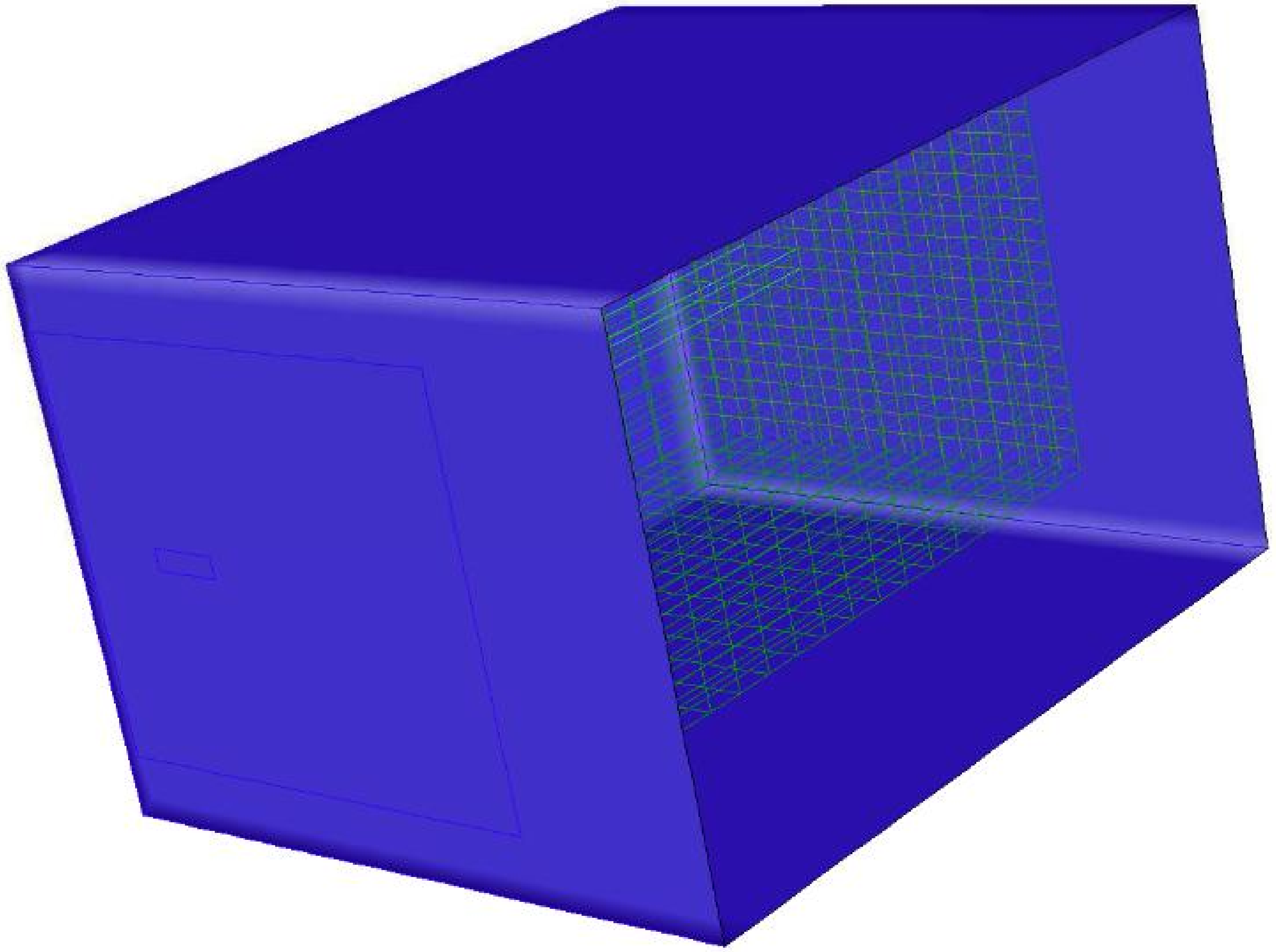

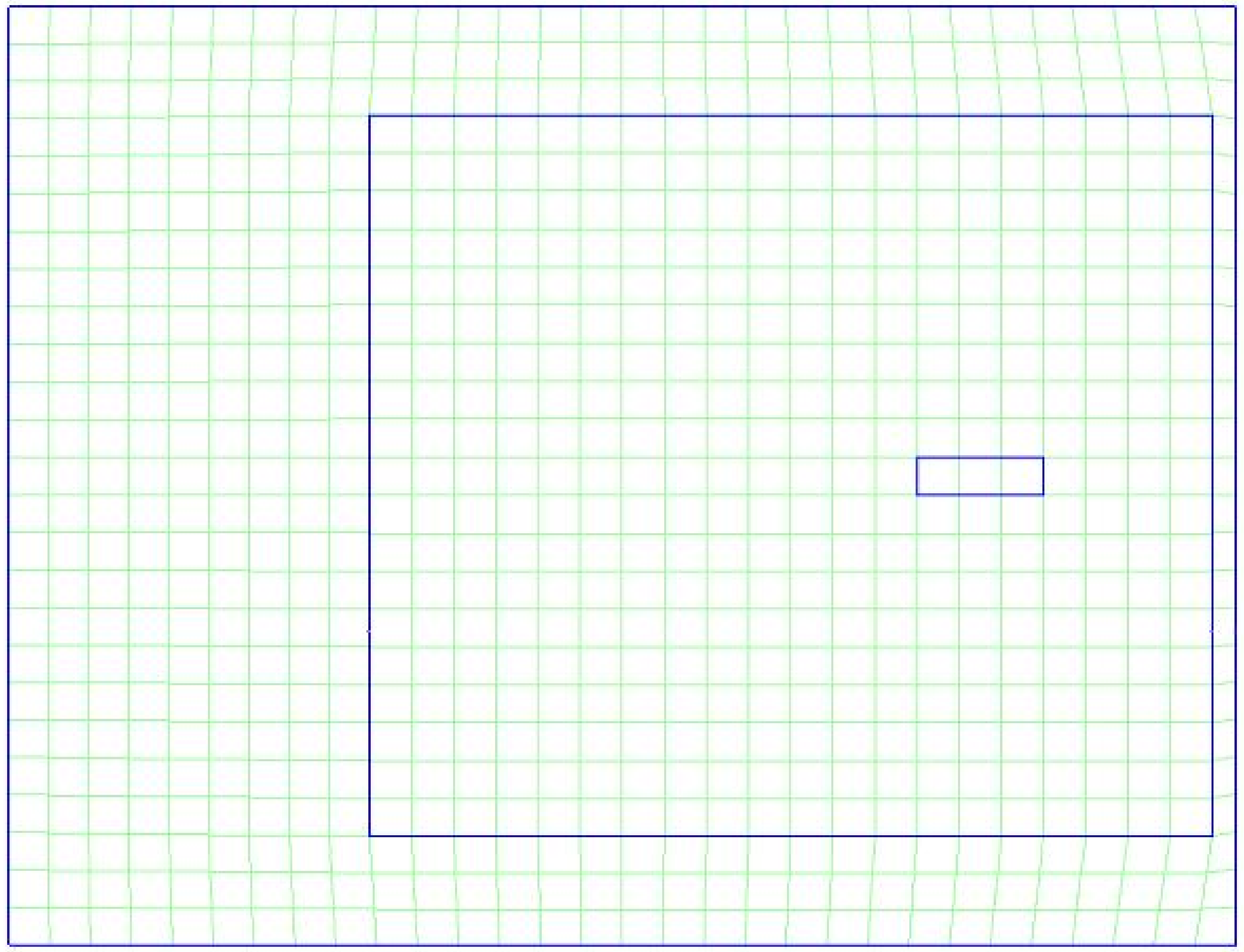

Grid profile in x-z plane

 Copyright 2001 Fluent Inc. All rights reserved.

Results

- Condensation Rate

Inlet mass flow rate
CFD: 2.124 kg/s
Exp.: 2.032 kg/s
Error: 4.5%

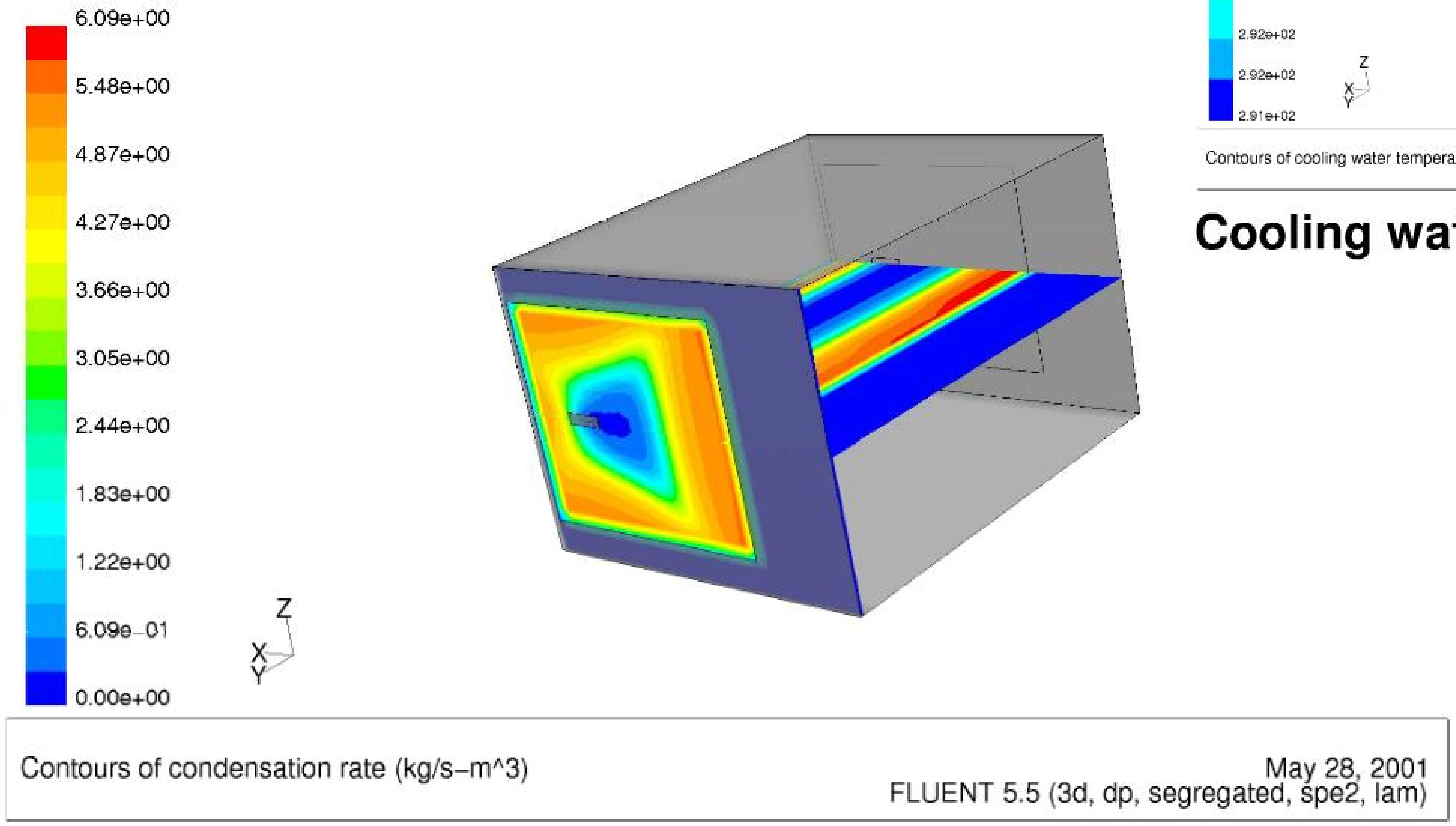

Volumetric condensation rate contours

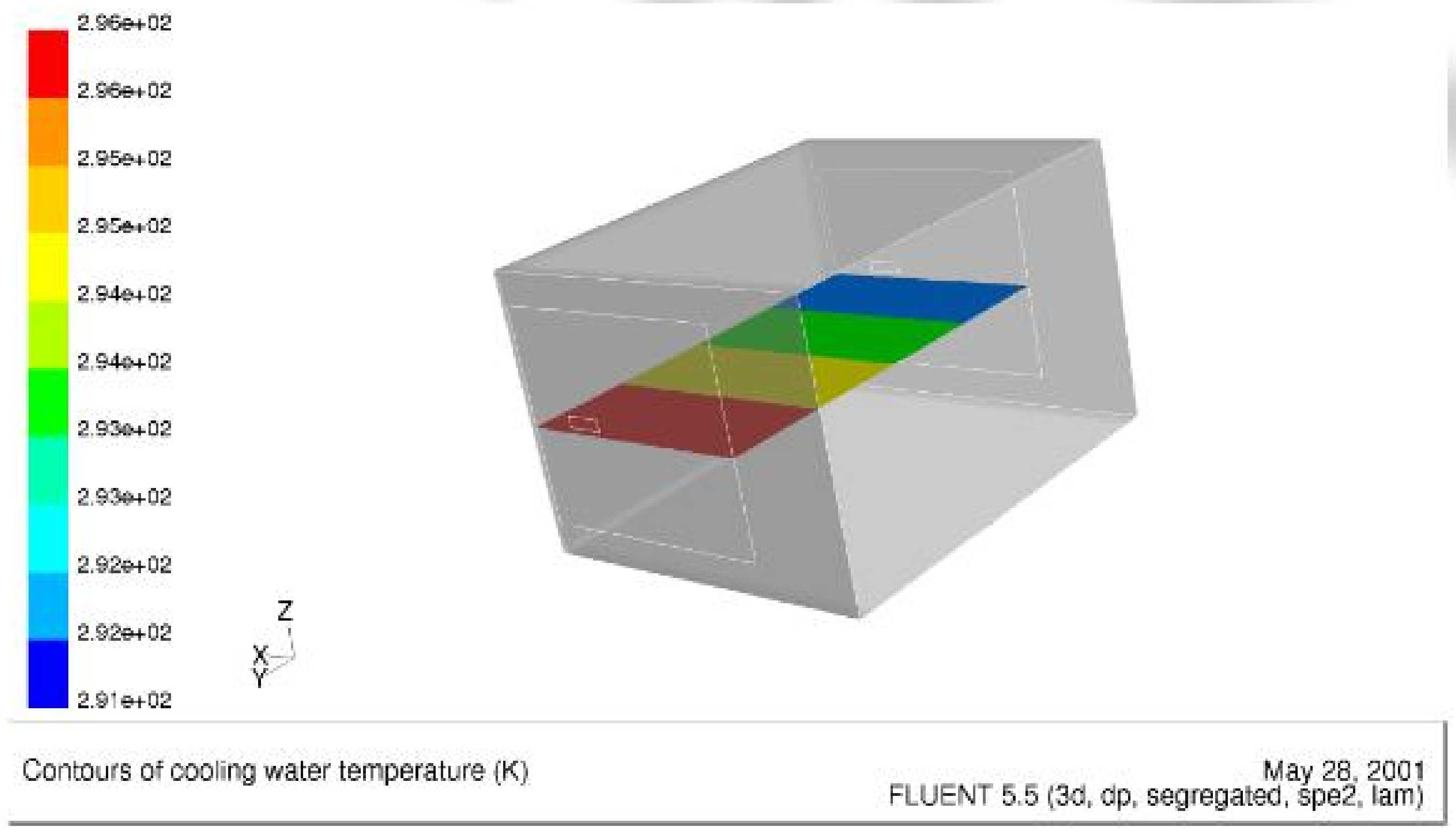

Cooling water temperature contours

 Copyright 2001 Fluent Inc. All rights reserved.

McAllister Condenser Flow Field

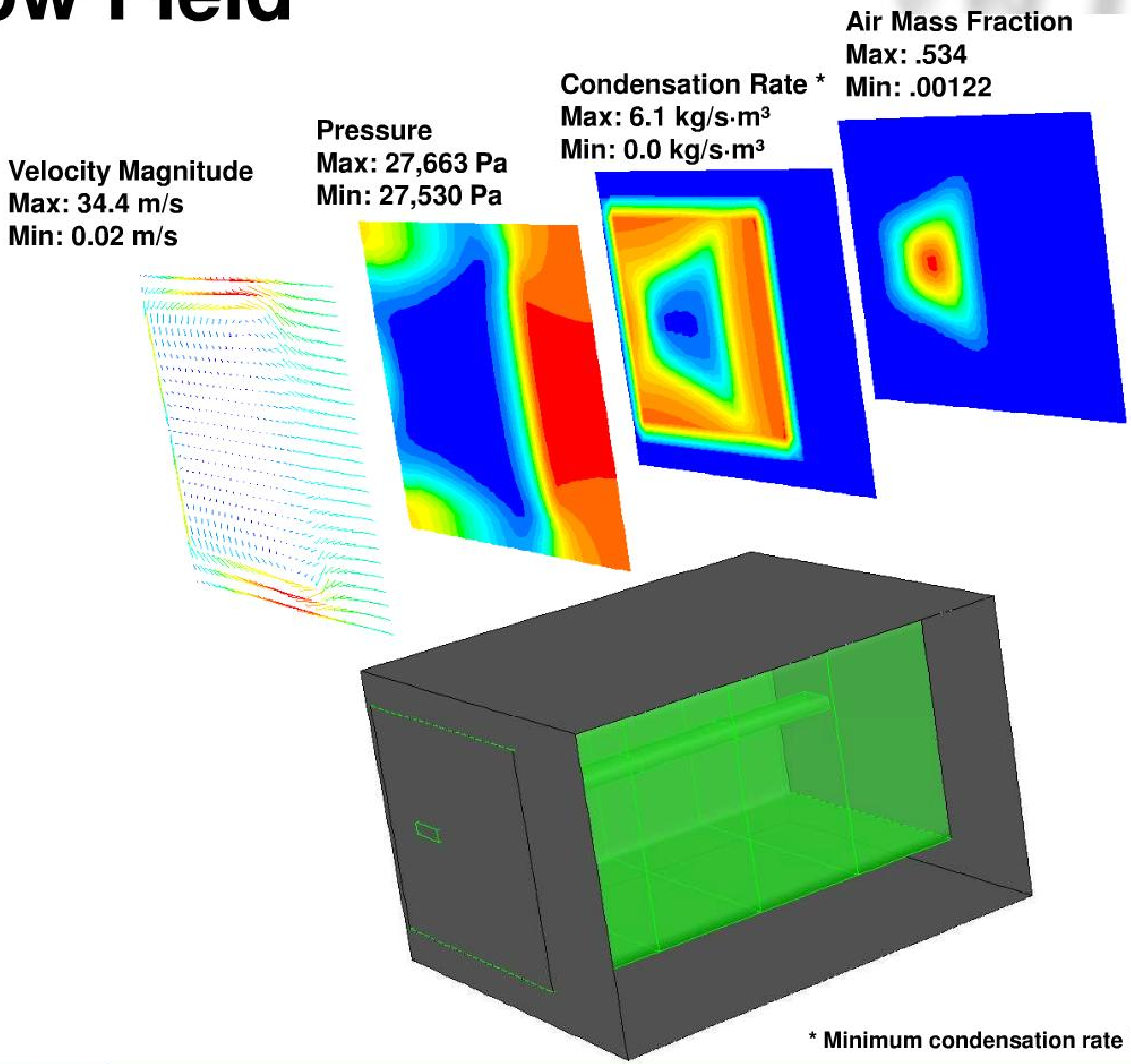

* Minimum condensation rate in tube bundle is 0.18 kg/s·m³

 Copyright 2001 Fluent Inc. All rights reserved.

Effect of Air on Condensation Rate

Comparison of modeling results with and without non-condensable gases

	Experiment	Non-condensable effects included	Non-condensable effects not included
Inlet mass flow rate	2.032	2.124	2.652

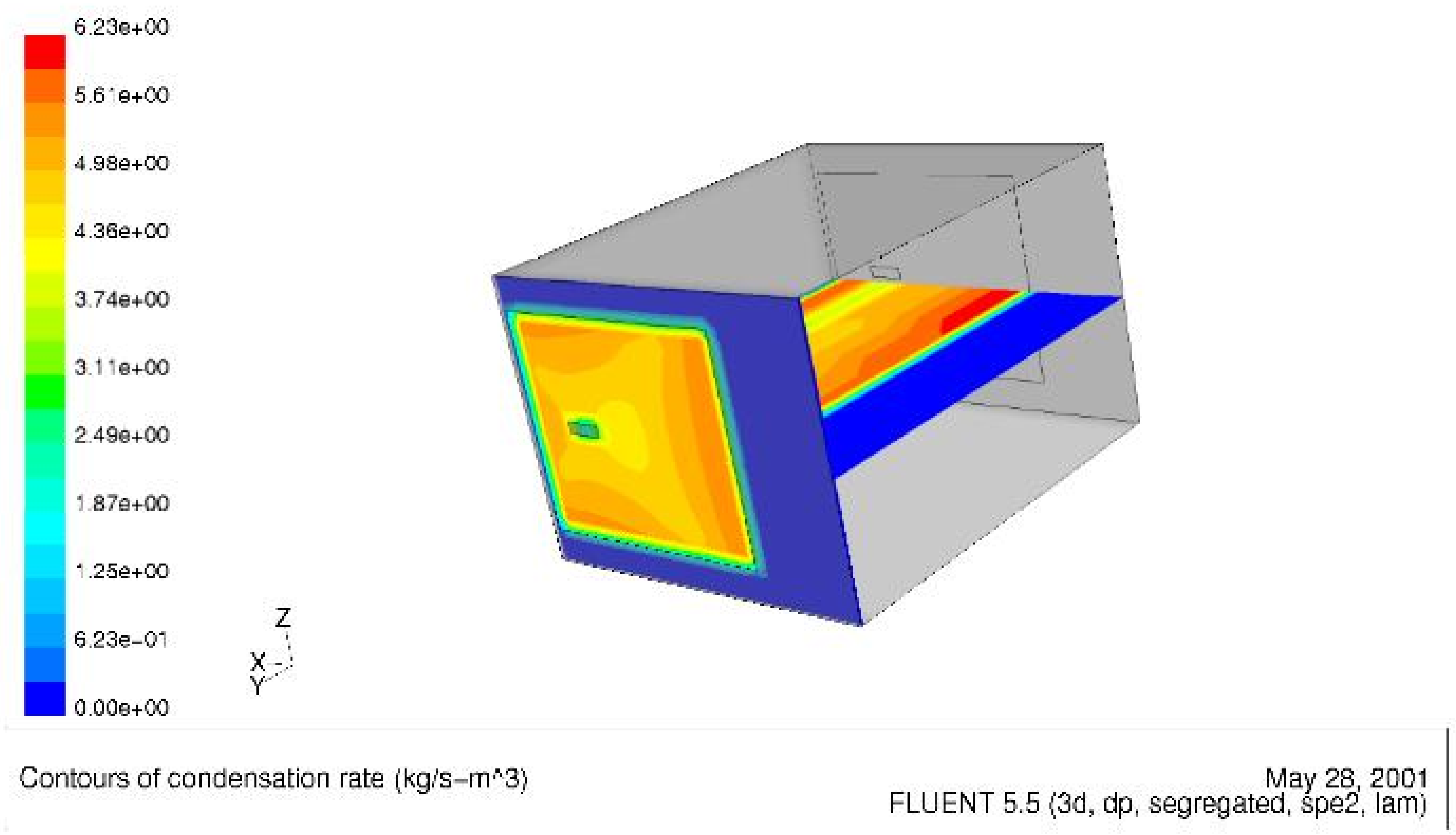

Volumetric condensation rate contours without air

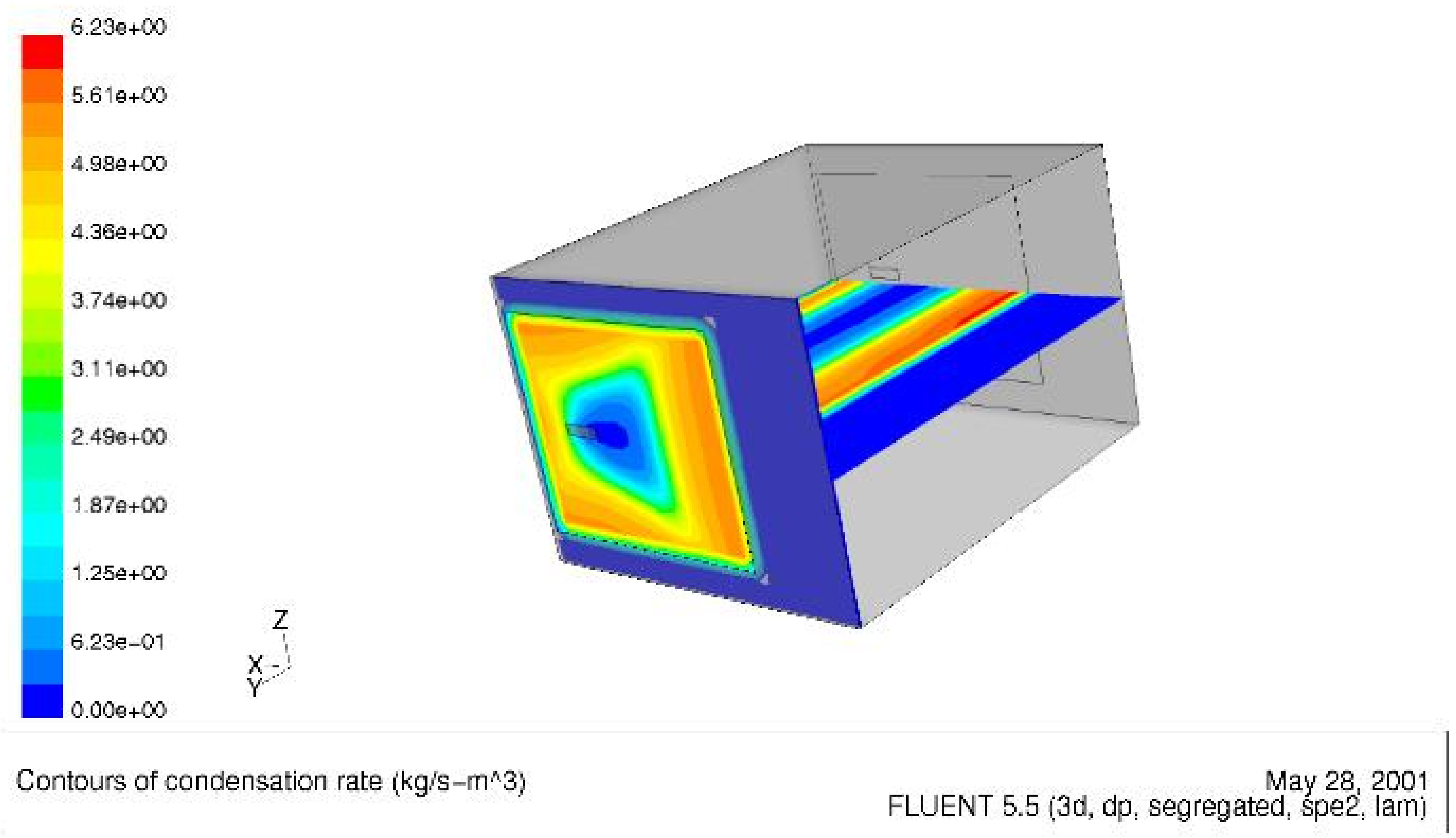

Volumetric condensation rate contours with air

 Copyright 2001 Fluent Inc. All rights reserved.

Effect of Inundation on Condensation Rate

- Tracking condensate film flow rate from upper tubes to lower tubes allows use of inundation correction factor

	Experiment	Inundation effects not modeled	Inundation effects modeled
Inlet mass flow rate	2.032	2.124	2.064

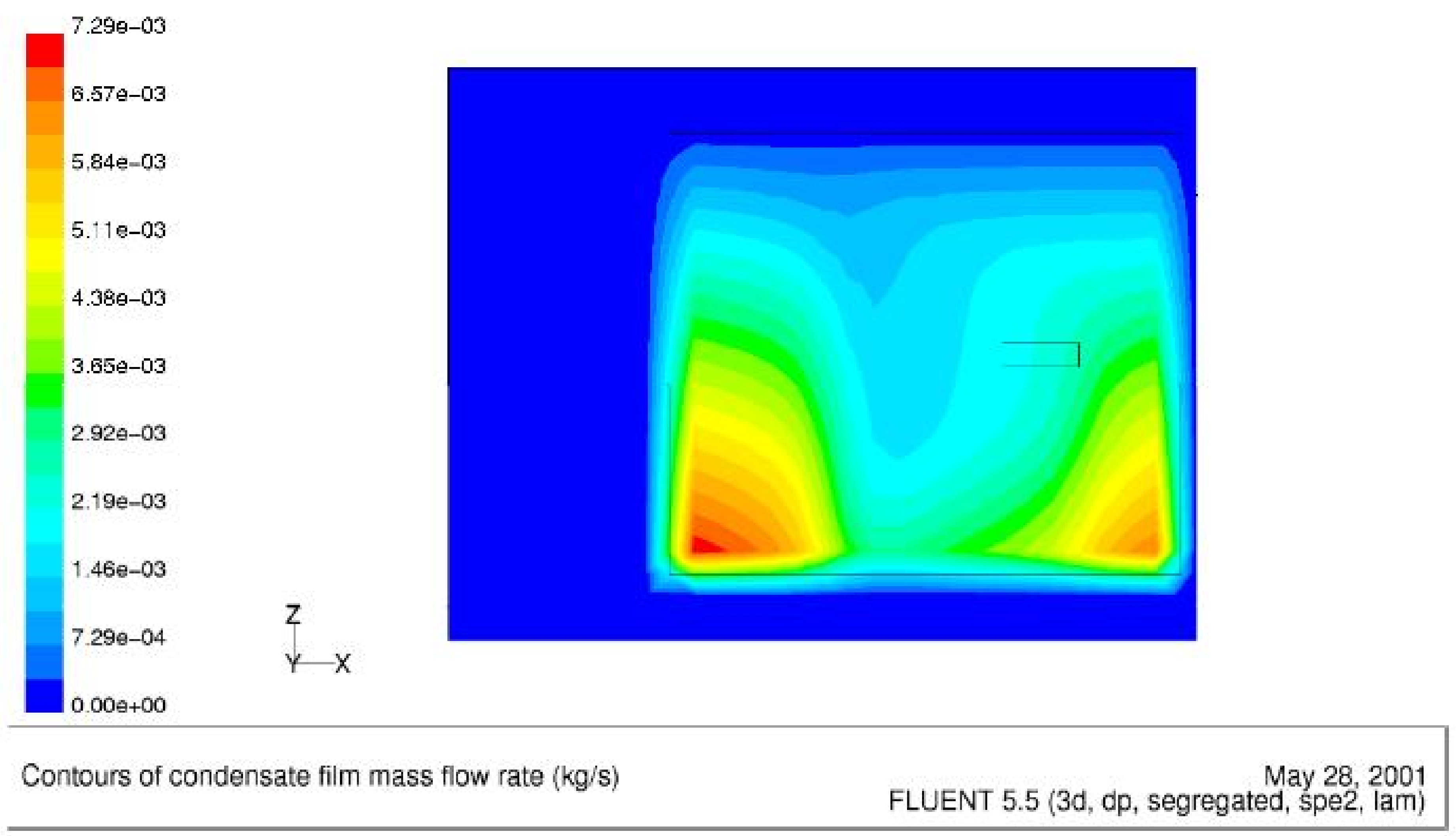

Contours of condensate film mass flow rate

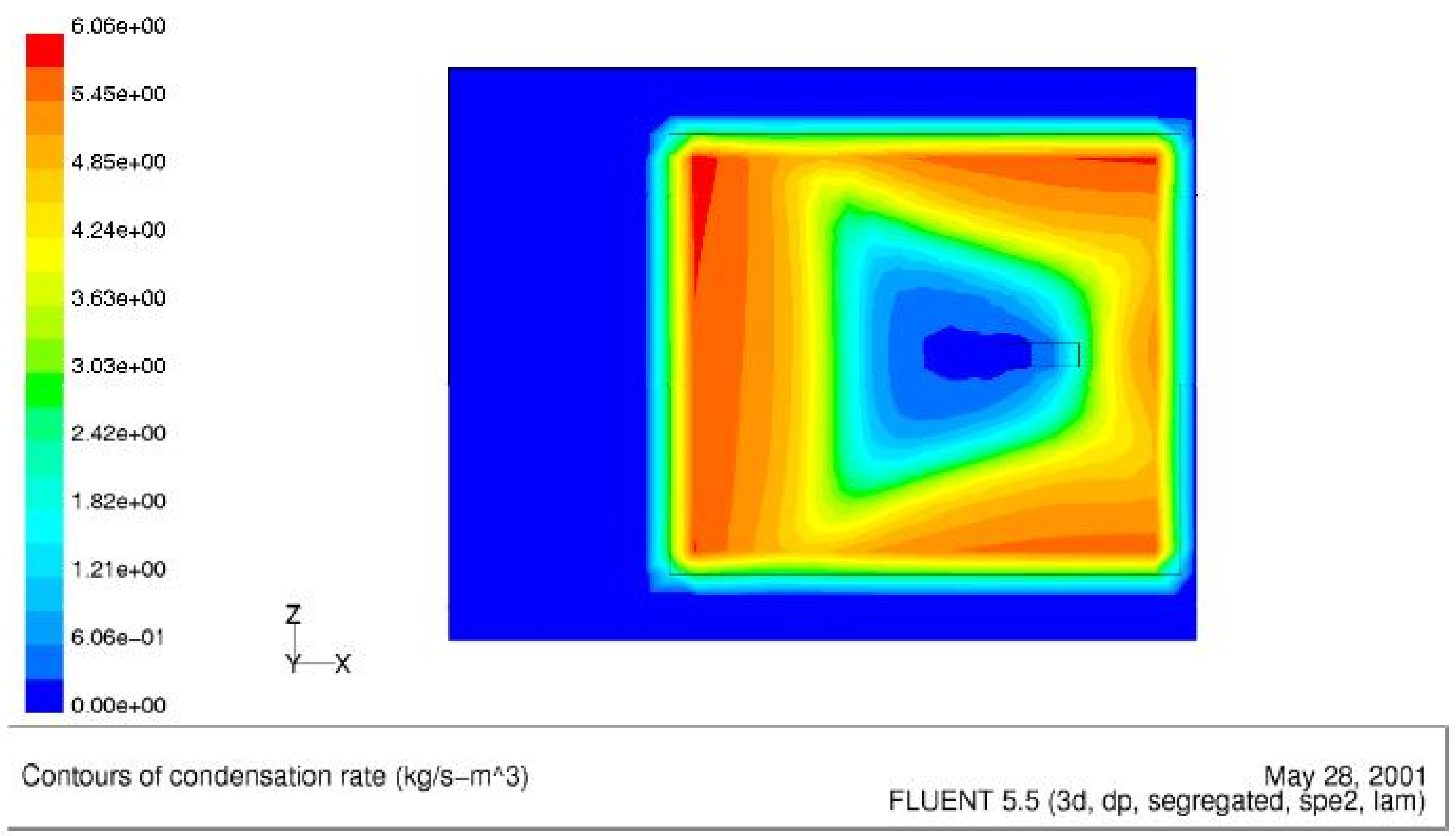

Contours of volumetric condensation rate

Copyright 2001 Fluent Inc. All rights reserved.

Conclusions

- Modeling phase change processes in heat exchangers is possible in Fluent 5 through the use of UDFs
  - This approach is well-suited for falling film condensation or evaporation processes
  - Heat and mass transfer models must be provided by the user
- CFD modeling of McAllister condenser
  - Description of model development process intended to serve as a reference for users who wish to develop similar models
  - Accurate results demonstrate the potential of this approach

 Copyright 2001 Fluent Inc. All rights reserved.